UNITORQ™

FITTING AND OPERATING MANUAL

ELECTROMAGNETIC CLUTCHES

TYPE - UFC (NORMALLY OFF)

Electromatic Engineers Pvt. Ltd., Udaipur

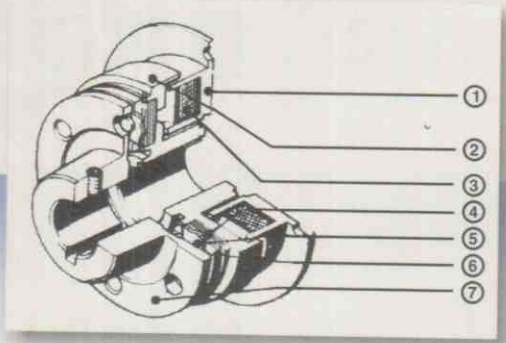

DESCRIPTION:- These type of clutches consist of stator, rotor and armature. Stator consist of epoxy coated coil, rotor fitted with friction liner and armature comprises of prestressed leaf spring. When Power is given to the stator, the armature is attracted towards the Asbestos free friction liner of the clutch rotor, which in turn transmit torque free of backlash. On taking off power supply, the prestressed leaf spring pull back the armature plate into its original position, releasing clutch positively without residual torque.

Component Description

1. Stator
2. Rotor
3. Coil
4. Friction Lining
5. Leaf Spring
6. Armature Plate
7. Flanged Hub

INSTALLATION:- Clutch stator has to be mounted on machine body, which should be at right angle to the machine shaft as well as centered internally may be with the help of a spigot. The rotor has to be fitted to Shaft with the help of key by maintaining H dimension as shown in table & figure. Use shims between collar and internal side of rotor. Also use bolt & washer or circlip out side as axial retainer. The armature has to be fitted on shaft with the help of key or on pulley by screws keeping air gap 'a' between it & rotor.

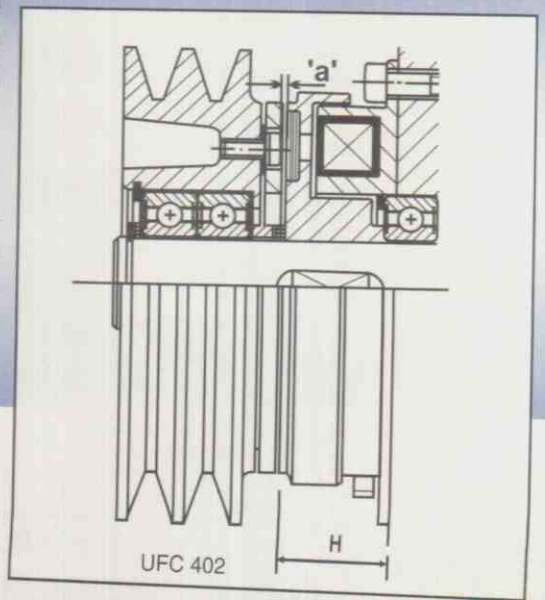

MAINTENANCE:- Unitorq clutches are almost maintenance free. For optimum performance it is desirable to check and adjust air gap "ag" periodically. This periodicity depends on application i.e. operating frequency, system inertia to be transmitted etc. Air gap can be adjusted easily by reducing shims between rotor and armature & adding on between armature and retainer or by pushing armature to rotor side after loosening bolts.

Clutch size	08	15	30	50	60	125	250	500	625	1240	2550
Minimum gap 'a'	0.2	0.2	0.3	0.3	0.3	0.3	0.5	0.5	0.8	0.8	1.0
Maximum gap 'a'	0.4	0.4	0.5	0.6	0.7	0.8	1.0	1.2	1.5	1.7	2.0
Dimension H in mm.	24	26.5	30	30	33.5	37.5	44	51	63	76.5	93

SWITCHING: Normally Off type clutches operates on D.C. voltage, hence A.C. to D.C. conversion is done by means of a suitable rectifier. Switching of the clutch can be on either sides. However, once application demands, higher switching frequency / faster engagement and disengagement time. Switching must be carried out on D.C. side. To restrict the high inductive voltage / back EMF a suitable supressor and capicitor network is provided across the contactor coil.

Do : For better life and best performance it is requested to check air gap regularly and as and when you notice that releasing of armature slow or slip takes place.

Do Not : Pour oil, grease, water and lubricant.
Allow dust and metal chips into clutch unit.
Give improper voltage
Use hub puller on the periphery of rotor or armature assembly.
(Withdraw through tapped holes provided on the rotor & armature)

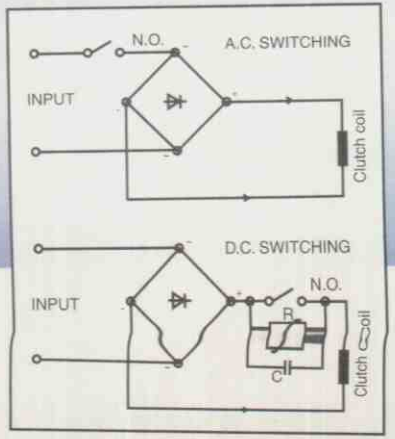

SWITCHING

Electromatic Engineers Pvt. Ltd.

Regd. Office : 8-B, Saheli Marg, Udaipur 313 001 - Rajasthan (India)

Tel. : (0294) 2526933, 2560675 Fax : (0294) 2526525 E-mail : unitorq@datainfosys.net

For any further information or help please contact :

OUR OTHER PRODUCTS :

CLUTCH BRAKE COMBINATIONS

BEARING MOUNTED CLUTCHES

NORMALLY OFF BRAKES

FAIL SAFE BRAKES

BRAKE MOTORS

CLUTCH BRAKE UNITS WITH MOTOR & GEAR BOX

Regional Offices / Dealers

Delhi
Electromatic
011-25710274
98102 55901

Chennai
Metro Engg. Enterprises
044-25736671
044-3100 5072

Kolkata
Electromatic
033-26746308
94330 46308

Pune
Accurate Engg. Industries
020-24356994
98224 31294

Coimbatore
Vees Systems
0422-2448432
98422 44843

Hyderabad
Karvy Engineering
040-27533112
98480 44729

Bangalore
Sumukha Engineers
080-23490695
98440 70752

Bhillai
Esskar Engg. Corp.
0788-2226202
98261 82401

Indore
Shivam Engg.
0731-5043317
0731-3108876